Part 2-D) Installation with Tsukayu adaptive brackets & plates assembly kit

(ix) Kawasaki Vulcan 900 Classic/ Classic LT

Two hardware kits are needed: a) Q-TSU809P adaptive brackets kit; b) Q-TSU809 bracket plates assembly kit

Fig. 2-D-(ix)-1

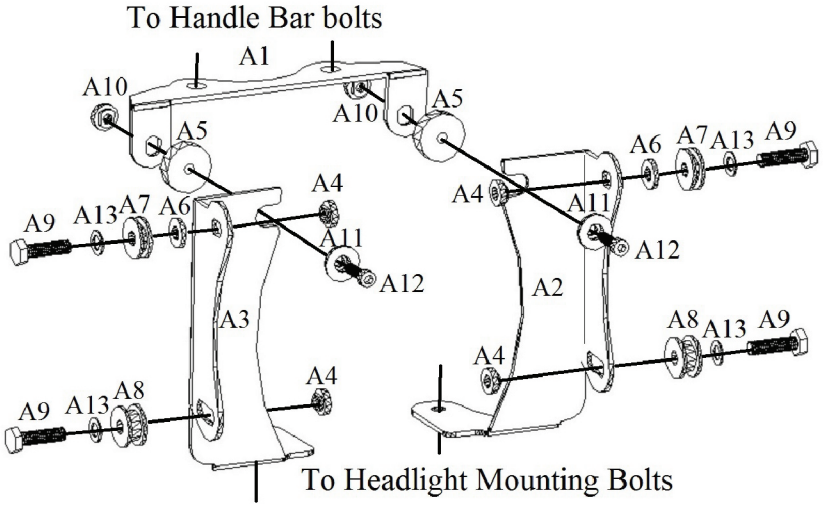

Q-TSU809P adaptive brackets kit includes:
A1)Q-TSU809P_P1 x 1pc
A2)Q-TSU809P_P2 left x 1pc
A3)Q-TSU809P_P2 right x 1pc
A4)M8-MS_NUT x 4pcs
A5)Spacer 9mm(L), 6.5mm(I), 30mm(O) x 2pcs
A6)Spacer 3mm(L), 8.5mm(I), 18mm(O) x 2pcs
A7)RK Spacer 7.6mm x 2pcs
A8)RK Spacer 12.6mm x 2pcs
A9)Bolt M8x30mm(HEX Head) x 4pcs
A10)MS_NUT x 2pcs
A11)MS1_ver3 x 2pcs
A12)Bolt M6x20(Cylinder Head) x 2pcs
A13)M8 washers x 4pcs

Fig. 2-D-(ix)-2

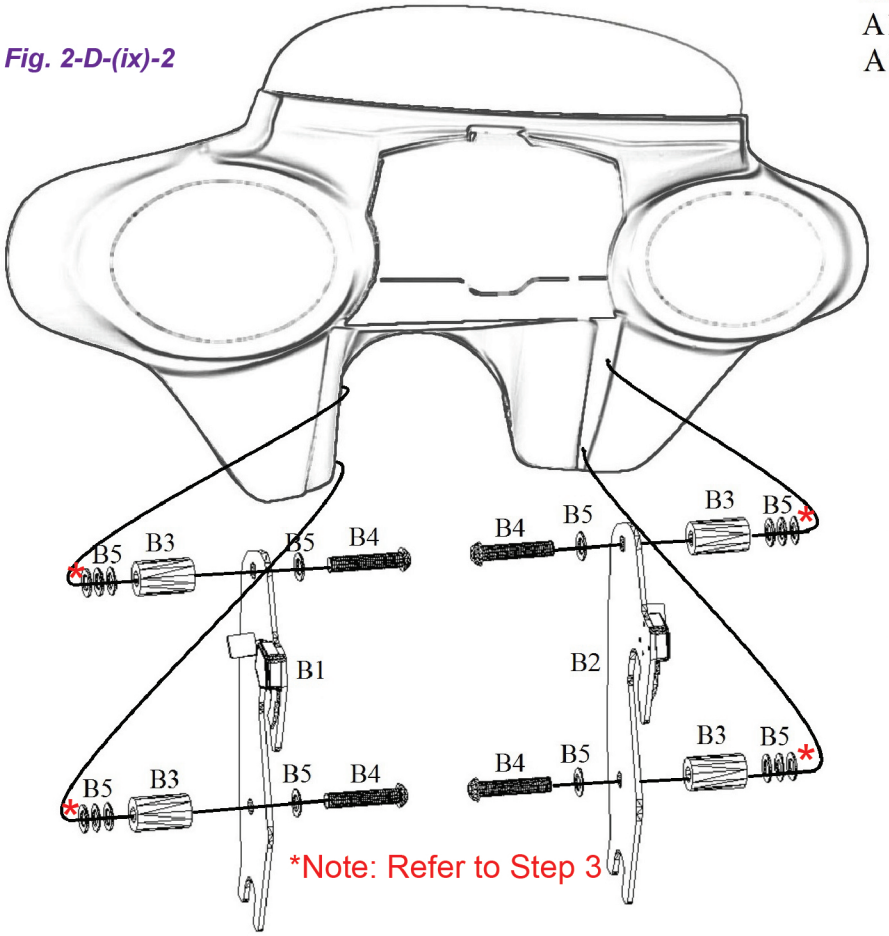

Q-TSU809 bracket plates kit includes:
B1)Q-TSU809 left x 1pcs
B2)Q-TSU809 right x 1pcs
B3)Spacer 28mm(L), 8.5mm(I), 18mm(O) x 4
B4)Bolt M8x50 (Round Head) x 4 pcs
B5)M8 washer x 40pcs

1. Cover gas tank and front fender with protective material.

2. Install the Q-TSU809p bracket assembly as shown in Fig.2-D-(ix)-1, the turn signal bar should be removed temporarily (turn signal bar is not shown in the figure). Measure the distance between the slots on left and right quick release latches, this distance will be used to adjust the distance between the bracket plates on fairing, you need to measure it as accurate as possible, we suggest measuring in mm.

*3. Install the mounting plates assembly as shown in Fig.2-D-(ix)-2. Add M8 washers if the distance of the two mounting plates doesn't perfectly match the distance between the two slots of Q-TSU809p. The spacers provided are close to what you need, but you may still need to add washers until they perfectly match, make sure you use same number of spacers and washers for all holes. Don't mix up Left and Right bracket plates, the latches come with the bracket plates. Try to put the fairing on, normally you will need to modify the number of washers several times until they match.

4. Now put the fairing on, you may need a helper for doing this step easier. Make sure the bracket plates are tightened securely. Latch the both side bracket plates securely. Tighten all the bolts on the fairing and all bolts on the whole mounting system.

Copyright © Tsukayu - All rights reserved